iNOTEK 2025

UNIVERSITI TEKNIKAL MALAYSIA MELAKA

FAKULTI TEKNOLOGI DAN KEJURUTERAAN ELEKTRONIK DAN KOMPUTER

IDP (Sem 2 2024-2025)

Smart IoT Monitoring System for Lobster Aquaculture

Goh Chee Seng, Ivan Yeo Jung Siang, Tan Jit Sheng

FACULTY OF ELECTRONICS AND COMPUTER TECHNOLOGY AND ENGINEERING

Contact Person: TS.AZAHARI BIN SALLEH (azahari@utem.edu.my)

PROJECT DESCRIPTION

Efficient queue management is crucial for improving patient care. Our system uses real-time prioritization and notifications, and IoT health monitoring to optimize waiting times and enhance patient experience.

OBJECTIVES

- To design and develop an IoT-based monitoring system that tracks and record critical water parameters for lobster aquaculture.
- •To create a user-friendly IoT dashboard interface that allows users to receive notifications, and access historical data to make informed judgement on aquaculture management.

NOVELTY & INVENTIVENESS

- ***Real-time* Monitoring System**: Fully cloud based system for easy access real time data.
- ***Condition Scoring System:*** *Shows severity of the status of the habitat through points.*

POTENTIAL OF COMMERCIALIZATION

- **Rising interest in sustainable aquaculture and seafood quality**: High demand in live lobsters
- **Enhanced aquaculture survival rate**: Reduce the unfavourable condition happened in farm.
- **Technology Integration**: Combines IoT and mobile applications, meeting the growing trend toward digital aquaculture transformation.

References

[1] S. A. Adha Taridala, L. O. Muhammad Aslan, Yusnaini, and Asriya, "Income and cost efficiency of lobster farming in Soropia, Southeast Sulawesi, Indonesia," IOP Conference Series: Earth and Environmental Science, vol. 382, p. 012037, Dec. 2019, doi: https:/doi.org/10.1088/1755-1315/382/1/01203

[2] A. Shakirin and I. Ahmad, "Aquarium Monitoring System via IOT," Journal of Engineering Technology, vol. 10, pp. 13–16, 2022, Available: https://bmi.unikl.edu.my/wp-content/uploads/2022/11/13_16_Aquarium-Monitoring-System-via IOT_2022100003.pdf

[3] Y. Ma and W. Ding, "Design of Intelligent Monitoring System for Aquaculture Water Dissolved Oxygen," 2018 IEEE 3rd Advanced Information Technology, Electronic and Automation Control Conference (IAEAC), Oct. 2018, doi: https://doi.org/10.1109/iaeac.2018.8577649.

PRODUCT FEATURES

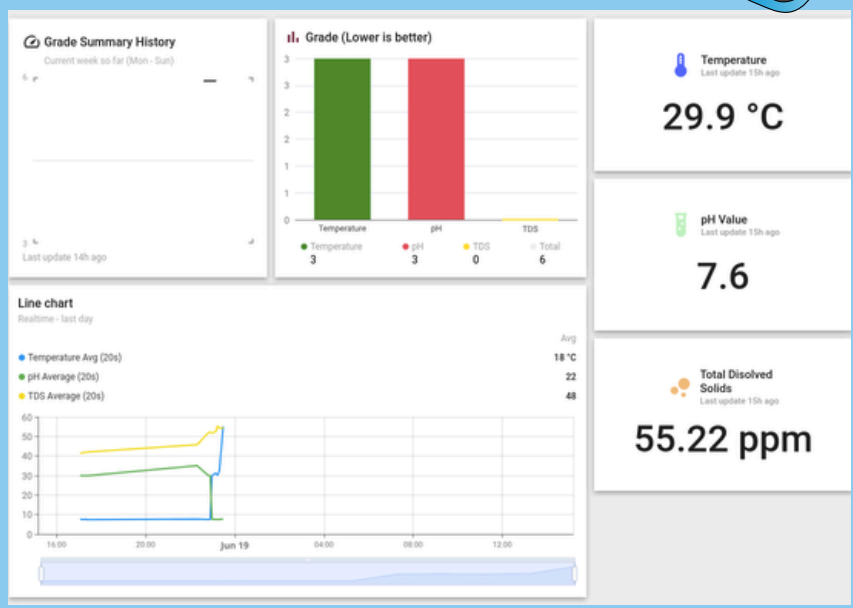

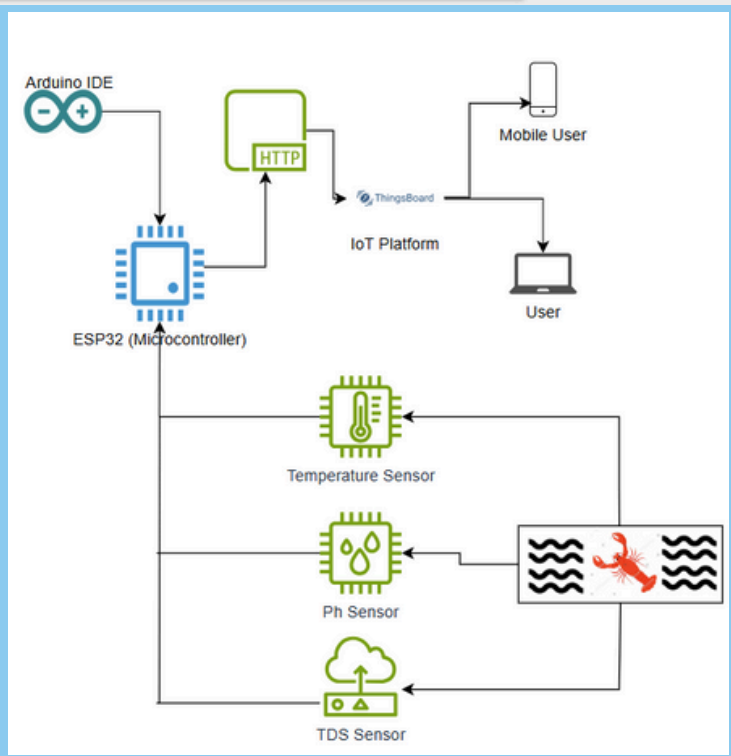

SUSTAINABILITY DEVELOPMENT GOALS

- ***SDG 9:*** Industry, Innovation, and Infrastructure
- ***SDG 12:*** Responsible Consumption and Production
- ***SDG 14***: Life Below Water